Technical Drawings

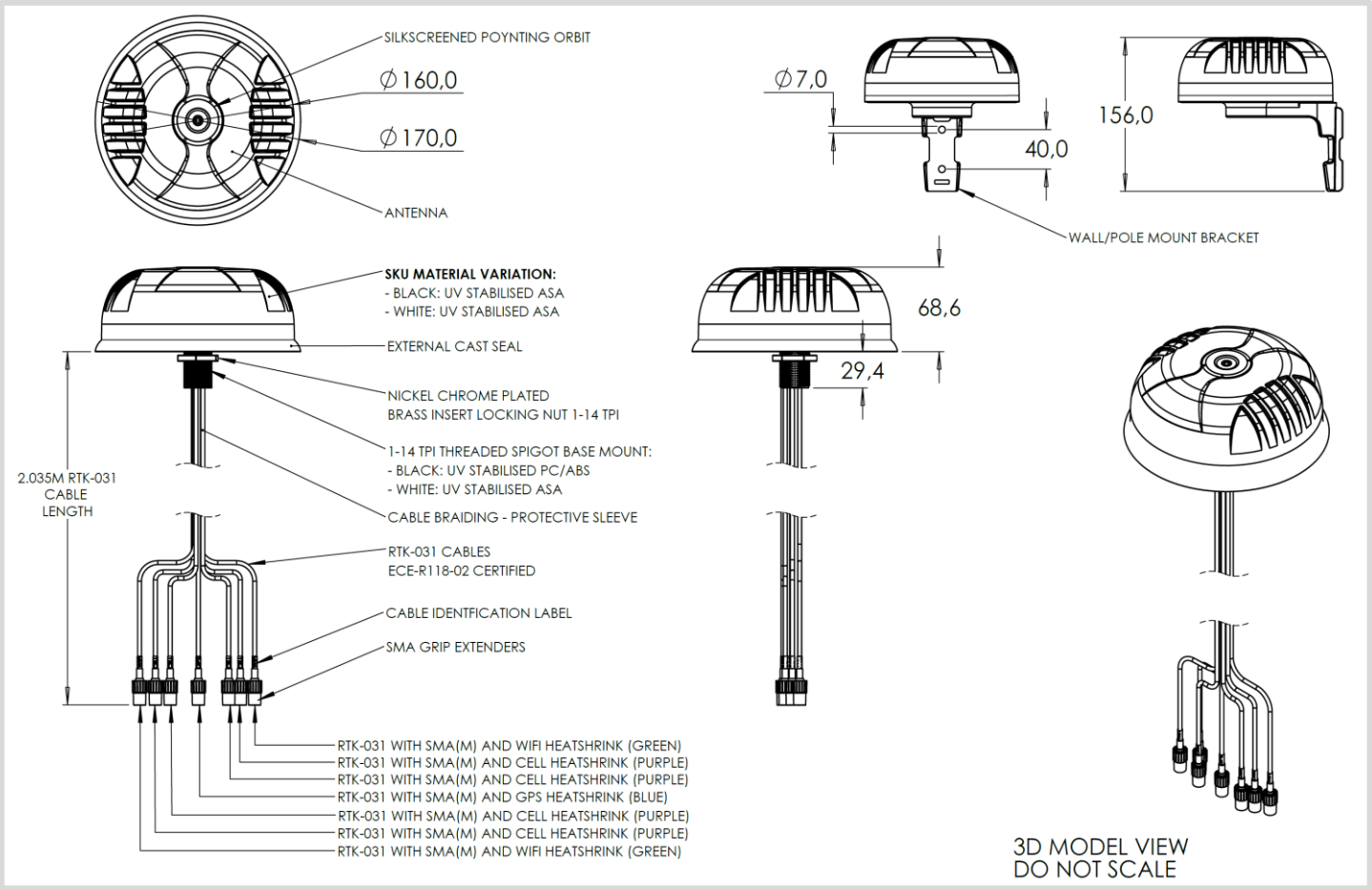

©2025 Poynting Antennas (Pty) Ltd. All rights reserved
Product Specifications may change without prior notice
Revised: August 2025

Regulatory Compliance: RoHS 2011/65/EU Compliant | ISO 9001:2015
Document version: TS-MIMO-0004-V2-17 REV 1.0
www.poynting.tech